Electric Pumps

COA, COP, COV, COS, COSM, CZ

About us.

EMP s.r.o. has been established in the Czech Republic since 1991. The Slavkov production facility was taken over from MEZ Brno during the privatisation process and the manufacturing of electric motors and electric pumps re-introduced on 1st July 1994. EMP has therefore built on the long term tradition of electric motor manufacturing in the Czech Republic. Modern technologies are being utilised during the development, manufacturing and testing of electric motors and pumps inclusive of computerised motor design facilities and factory logistics.

The goal of the Company is to satisfy the requirements of our customer base.

Products

- Asynchronous electric motors (frame size 63- 112), inklusive of **special tailor-made design**
- Build-in stator/rotor packs (frame size up to 160)
- Immersible pumps 4COA pumps, pressure up to 40kPa (page 3)
- High pressure COV pumps, pressure up to 800kPa (page 7)
- Multistage COS and COSM pumps, pressure up to 2000kPa (page. 9 a 12)
  Gear pumps, pressure up to 1200kPa (page. 13)
- Special submersible TMZ and JMZ motors in IP68 cover

IMMERSIBLE PUMPS

COA, COP

Rated **HEAD** 2 - 4m | Rated **FLOW** 16-260l/min

Page 4 - 7

HIGH PRESSURE PUMPS

COV

Rated **HEAD** 20 - 50m | Rated **FLOW** 28-60l/min

Page 8 - 9

MULTISTAGE PUMPS

COS

Rated **HEAD** 10 - 60m | Rated **FLOW** 30-220l/min

Page 10 - 12

MULTISTAGE PUMPS

COSM

Rated **HEAD** 48 - 215m | Rated **FLOW** 30l/min

Page 13

GEAR PUMPS

CZ

Rated **HEAD** 30 - 120m | Rated **FLOW** 0,9-2,4l/min

Page 13 - 14

IMMERSIBLE PUMP
COA & COP SERIES

COP PUMPS

„Plastic version“

COA PUMPS

„Aluminium version“

The electric pumps are equipped with a flange which enables their fitting directly on top of the tank, which contains the pumped liquid. The maximum and the minimum immersion level is shown on the dimensional drawing. The pumps must not be used for pumping of flammable or combustible liquids. The size of impurities in the pumped liquid should not exceed 0.5mm. Should larger impurities be found in the pumped liquid the pump suction opening should be equipped with a protective sieve. The standard paint finish the electric pumps are supplied with is S 2003 synthetic primer.

Example of pump coding: 4 COA 2 – 12 (P1)

- **(P1)** → „Position of terminal block (see drawing page 5)
- **12** → „immersion depth **120mm** “
- **4** → „Head **4**m“
- **2** → „Flow approx. **20l/min**“
- **COA** → „COA = **ALUMINIUM** version, COP = **PLASTIC** version (see used material)“

TYPE	HEAD [m]	PRESSURE [kPa]	FLOW [l/min]	POWER [kW] (at 400V, 50Hz)	CURRENT [A] (at 400V, 50Hz)	BREAKER SETTING [A] (at 400V, 50Hz)
2COP1-	2	20	16	0,050	0,14	0,22
4COP2-; 4COA2-	4	40	25	0,090	0,26	0,35
4COP4-; 4COA4-	4	40	40	0,120	0,33	0,45
4COP6-; 4COA6-	4	40	63	0,155	0,43	0,60
4COA10-	4	40	100	0,350	0,64	0,84
4COA14-	4	40	140	0,400	0,86	1,04
4COA16-	4	40	160	0,500	1,05	1,30
4COA24-	4	40	260	0,970	1,60	1,80

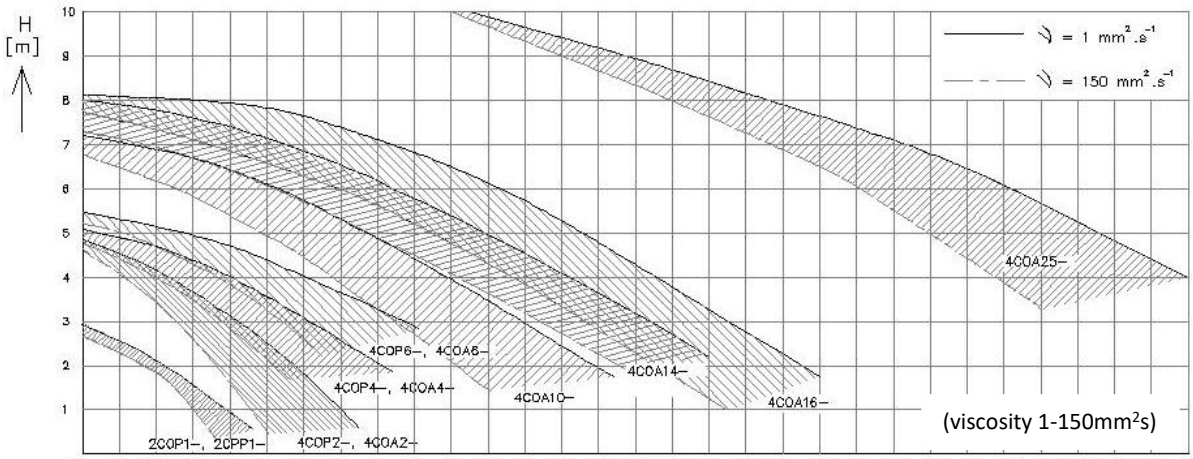

1m (H_2O)	≈ 0,1 at	= 10 kPa	≈ 0,1 bar
1 at	≈ 100 kPa	≈ 10 m (H_2O)	≈ 0,1 MPa

2COP1-, 4COP2,4,6- pump dimensions

TYPE	A	B	M	Kg
2COP1-09	90	156	59	3,5
2COP1-10	100		69	3,5
2COP1-12	120		80	3,6
2COP1-14	140		100	3,6
2COP1-17	170		130	3,7
2COP1-22	220		180	3,8
2COP1-27	270		230	3,9
4COP2-09	90	156	59	3,5
4COP2-10	100		69	3,5
4COP2-12	120		80	3,6
4COP2-14	140		100	3,6
4COP2-17	170		130	3,7
4COP2-22	220		180	3,8
4COP2-27	270		230	3,9
4COP4-09	90	156	59	3,8
4COP4-10	100		69	3,8
4COP4-12	120		80	3,9
4COP4-14	140		100	3,9
4COP4-17	170		130	4
4COP4-22	220		180	4,1
4COP4-27	270		230	4,2
4COP6-09	90	171	59	4,5
4COP6-10	100		69	4,6
4COP6-12	120		80	4,6
4COP6-14	140		100	4,6
4COP6-17	170		130	4,7
4COP6-22	220		180	4,8
4COP6-27	270		230	4,9

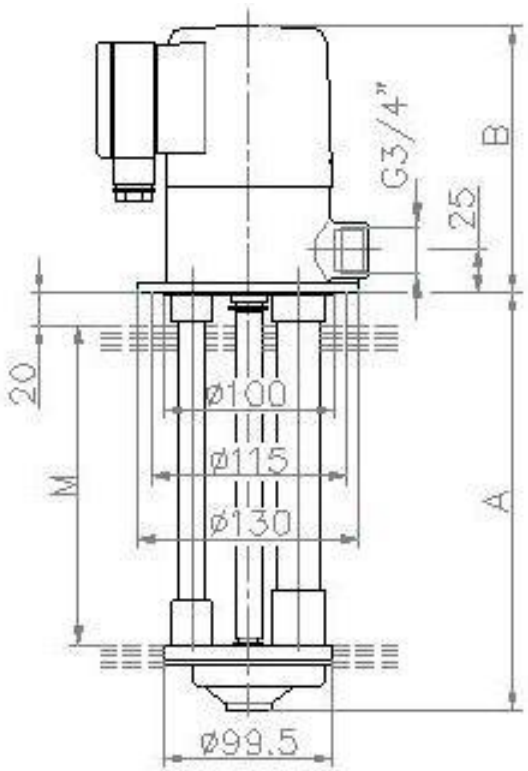

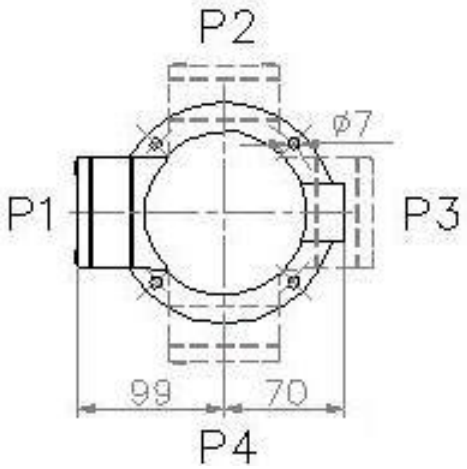

Used materials

POM = acetal copolymer PA6= polyamid

TYPE		IMPELLER	CHAMBER BOTTOM	CHAMBERS	PUMP TUBES	SHAFT
2COP1-	standard	POM	PA6 +30% Glass	PA6+ 30% Glass	1.0026	1.0060
	HV				1.4301	1.4021
4COP-	standard	POM	POA6	PA6+ 30% Glass	1.0026	1.0060
	HV				1.4301	1.4021

Standard – liquids with maximum viscosity 150mm2s-1 and 0-60°C

HV – resists weak alkali. Maximum liquid temperature 60°C

4COA2,4,6- pump dimensions

TYPE	A	B	M	Kg
4COA2-09	90	156	59	3,4
4COA2-10	100		69	3,4
4COA2-12	120		80	3,5
4COA2-14	140		100	3,7
4COA2-17	170		130	3,8
4COA2-22	220		180	4,1
4COA2-27	270		230	4,4
4COA2-35*	350		310	4,9
4COA4-09	90	156	59	3,4
4COA4-10	100		69	3,5
4COA4-12	120		80	3,7
4COA4-14	140		100	3,8
4COA4-17	170		130	4
4COA4-22	220		180	4,4
4COA4-27	270		230	4,7
4COA4-35*	350		310	5,2
4COA6-09	90	171	59	4
4COA6-10	100		69	4,1
4COA6-12	120		80	4,3
4COA6-14	140		100	4,4
4COA6-17	170		130	4,6
4COA6-22	220		180	5
4COA6-27	270		230	5,3
4COA6-35*	350		310	5,8

* pump body is complete single casting

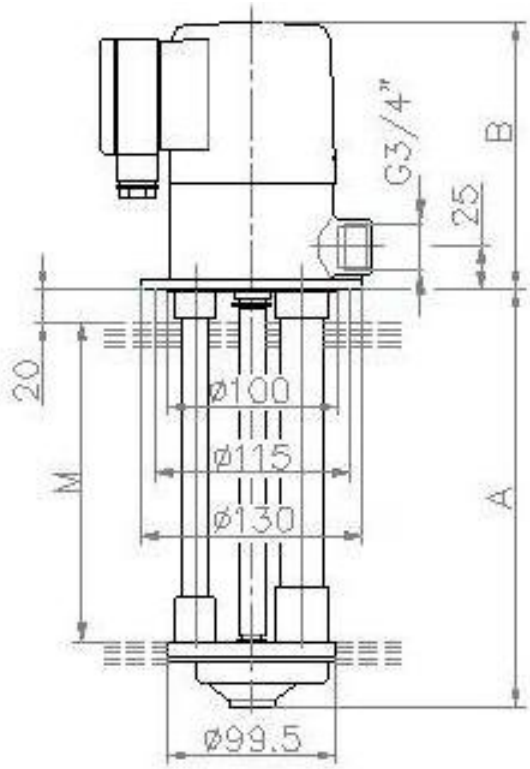

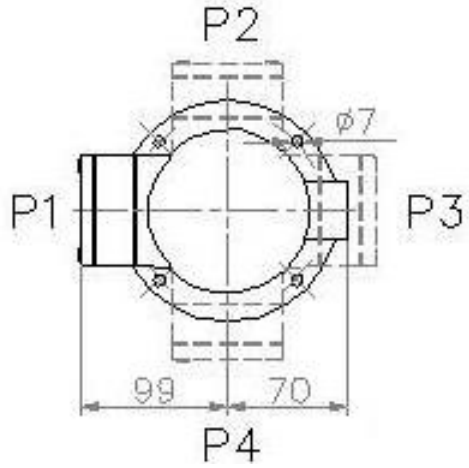

Used materials

POM = acetal copolymer

PA6= polyamid

TYPE		IMPELLER	CHAMBER BOTTOM	CHAMBER	TUBES	SHAFT
4COA2,4,6-	standard	POM / Al	Al alloy	Al alloy	1.0026	1.0060
	AV2				CW508L	1.4021
	AV	Bronze	Bronze	Bronze		1.4571

Standard – liquids with maximum viscosity 150mm2s-1 and 0-60°C

AV2 – stainless steel version for water 0-60°C

AV – Acid-resistant stainless steel version for acids with min. pH3. Tepmerature of pumped liquid max. 60°C

4COA10, 14, 16, 25 - pump dimensions

TYPE	A	B	D	M	AV2 (kg)	AV (kg)
4COA10-17	170	238	160	110	7,3	12,7
4COA10-20	200			140	7,4	13,2
4COA10-22	220			160	7,5	13,4
4COA10-27	270			210	7,6	14,2
4COA10-35	350			290	8,1	15,3
4COA14-17	170	238	160	110	7,7	13,6
4COA14-20	200			140	7,8	13,9
4COA14-22	220			160	7,9	14,1
4COA14-27	270			210	8	14,6
4COA14-35	350			290	8,5	15,7
4COA16-18	180	238	160	110	8,5	14,3
4COA16-21	210			140	8,7	14,7
4COA16-23	230			160	8,9	15
4COA16-28	280			210	9,2	15,8
4COA16-36	360			290	9,8	17,1
4COA25-18	180	246	160	90	9,3	17,7
4COA25-28	280			200	10,2	19,3
4COA25-36	360			280	10,9	20,6

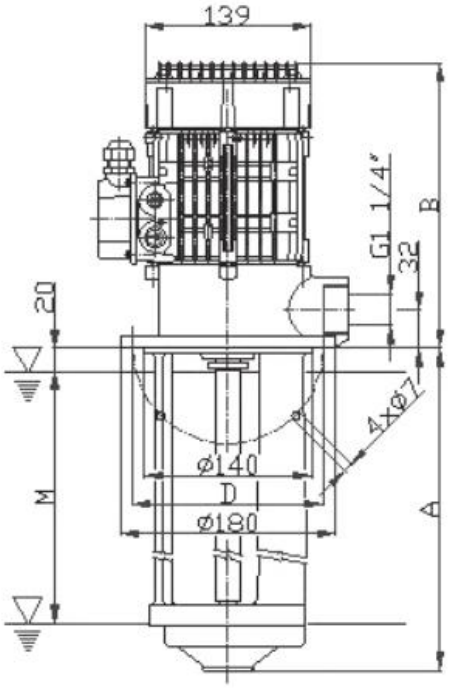

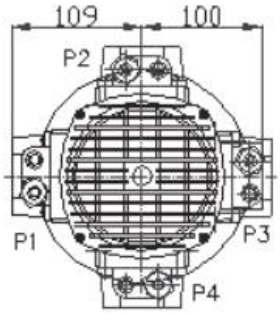

Used materials

POM = acetal copolymer PA6= polyamid

Type		IMPELLER	CHAMBER BOTTOM	PUMP BODY	SHAFT
4COA10,14-	standard	POM / Al	Al alloy	Al alloy	1.0060
	AV2				1.4021
	AV	Bronze	Bronze	Bronze	1.4571
4COA16,25-	standard	Al	Al alloy	Al alloy	1.0060
	AV2				1.4021
	AV	Bronze	Bronze	Bronze	1.4571

Standard – liquids with maximum viscosity 150mm2s-1 and 0-60°C

AV2 – stainless steel version for water 0-60°C

AV – Acid-resistant stainless steel version for acids with min. pH3. Tepmerature of pumped liquid max. 60°C

HIGH PRESSURE PUMPS COV SERIES

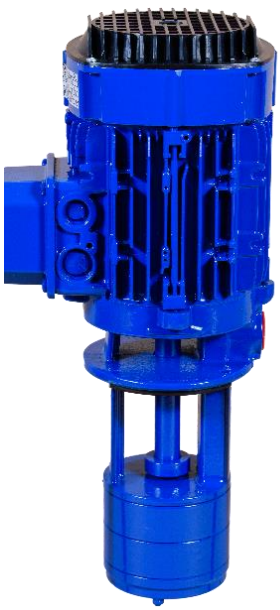

COV Pumps are designed for pumping of cooling liquid for machine tools. The viscosity of the pumped liquid can be maximum 90mm2s-1 (12°E) and its temperature form 0°C to 60°C. The maximum size of impurities can be 0.1mm. The pumps are not suitable for pumping of flammable or combustible liquids or used in explosive environments.
The pumps are flanged suitable for fitting directly onto the tank with the pumped liquid. The maximum and minimum immersion is to be determined from the pump drawing. The pumps are not suitable for pumping of flammable or combustible liquids or used in explosive environments. The maximum size of impurities can be 0.1mm. The pumps are usually supplied primed with S2003 synthetic primer.

Example of pump coding:

COV 23 - 15

- 15 → „immersion depth 150mm“
- 23 → „flow approx. 30l/min “
- COV 23 → „Head 20m“

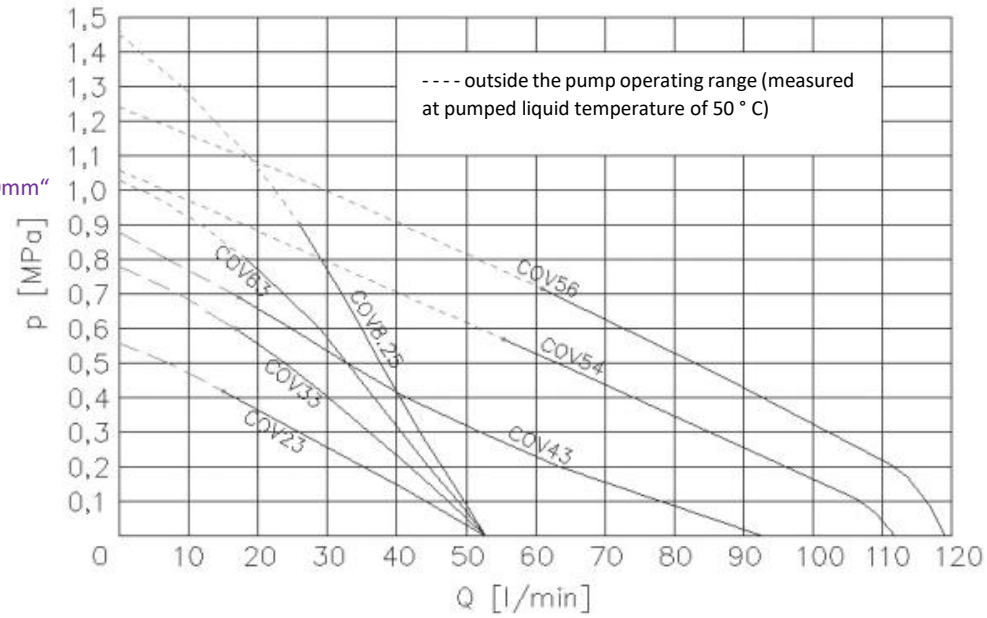

1m (H_2O)	≈ 0,1 at	= 10 kPa	≈ 0,1 bar
1 at	≈ 100 kPa	≈ 10 m (H_2O)	≈ 0,1 MPa

TYPE	HEAD [m]	HEAD [kPa]	FLOW [l/min]	POWER [kW] (at 400V, 50Hz)	CURRENT [A] (at 400V, 50Hz)	BREAKER SETTING [A] (at 400V, 50Hz)
COV23-	20	200	28	0,55	1,1	1,6
COV33-	30	300	32	0,8	1,8	2,8
COV43-	40	400	32	1,35	2,6	4,0
COV54-	50	500	44	2,55	4,9	5,3
COV56-	50	500	60	3,2	6,1	7,3
COV63-	60	600	30	1,3	2,6	2,8
COV8.25-	80	800	25	1,9	3,6	3,7

COV pumps dimensions

TYPE	A	B	M	Kg
COV23-07	90	235	10	8,7
COV23-15	100		90	9,0
COV23-25	120		190	9,6
COV33-10	100	284	40	13,1
COV33-18	180	262	130	13,4
COV33-28	280		180	14,0
COV43-18	180	295	230	22,2
COV43-25	250		310	22,7
COV43-39	390		310	23,8
COV54-18	180	320	100	22,1
COV54-25	250		170	22,6
COV54-39	390		310	23,7

TYPE	A	B	M	Kg
COV56-18	180	320	100	24,4
COV56-25	250		170	24,9
COV56-39	390		310	26
COV63-13	130	262	70	14,3
COV63-21	210		150	14,6
COV63-31	310		250	15,2
COV8.25-16	160	284	100	18,4
COV8.25-24	240		180	18,7
COV8.25-34	340		280	19,3

COV23

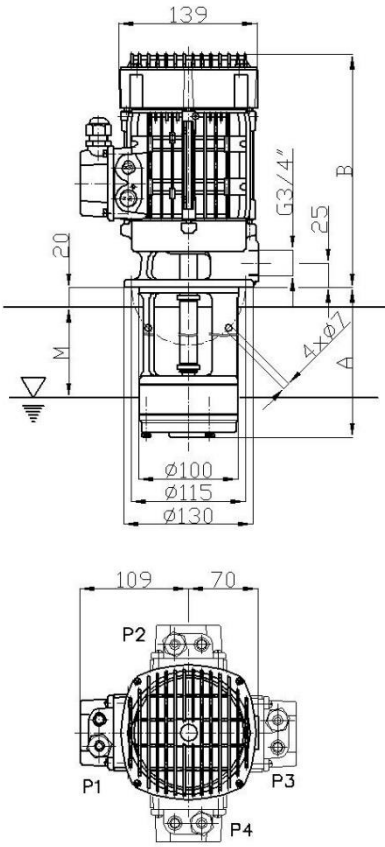

COV33, 63, 8.25

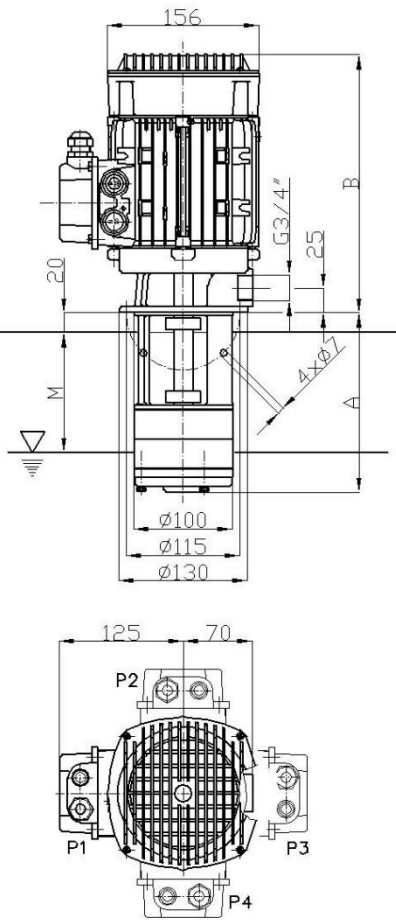

COV43, 54, 56

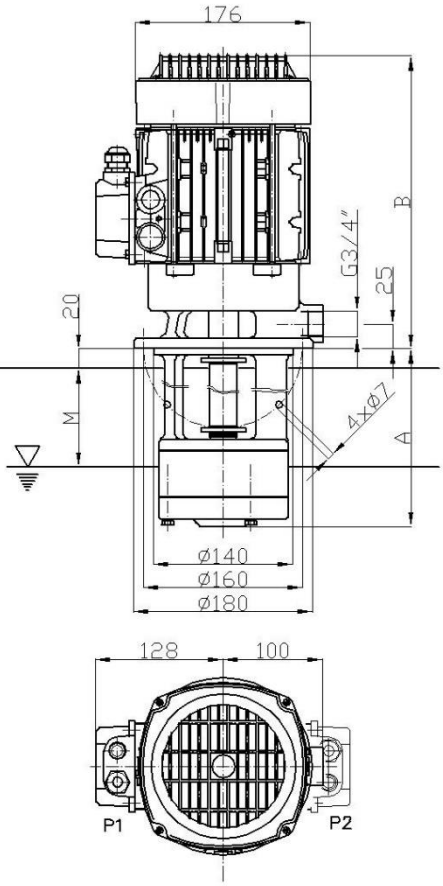

Used material

IMPELLER	CHAMBERS	CHAMBERS BOTTOM	PUMP BODY	SHAFT
Bronze	Cast-iron	Cast-iron	Al slitina	1.0060

MULTISTAGE PUMPS COS SERIES

The pumps are flanged suitable for fitting directly onto the tank with the pumped liquid. The pumps are designed for pumping of cooling liquids with viscosity of max 30mm/s and maximum temperature 80°C. The pumps are not suitable for pumping of flammable or combustible liquids or used in explosive environments. The value of acoustic pressure is max 72dB(A).

COSU 109: Pump with enclosed impeller, 100l/10m in one stage

COSU 158: Pump with enclosed impeller,, 150l/8,5m in one stage.

COSO 158: Pump with open impeller, 150l/8m in one stage.

COSU 227: Pump with enclosed impeller,, 220l/7m in one stage

COSO 227: Pump with open impeller, 220l/6m in one stage

COSO 312: Pump with open impeller, 30l/12m in one stage

Example of pump coding:

COSU 1092 - 16

- „immersion depth **160mm** (see page 11)“
- „**2 stage**“
- „Head approx. 9m in one stage“
- „Flow **100l/min**“
- „**U** = enclosed impeller, **O** = opened“

TYPE	HEAD [m]	FLOW [l/min]	POWER [kW]	CURRENT [A]	BREAKER SETTING [A] (400V,50Hz)
COSU 1091	10	100	0,42	1,1	1,4
COSU 1092	20		0,84	1,8	2,4
COSU 1093	30		1,23	2,3	3,1
COSU 1094	40		1,68	3,3	4,1
COSU 1095	50		2,10	4,0	4,9
COSU 1581	8,5	150	0,47	1,2	1,4
COSU 1582	17		0,94	2,0	2,6
COSU 1583	25,5		1,30	2,7	3,7
COSU 1584	34		1,98	3,5	4,8
COSO 1581	8	150	0,42	1,1	1,4
COSO 1582	16		0,85	1,8	2,6
COSO 1583	24		1,20	2,5	3,7
COSO 1584	32		1,80	3,2	4,8
COSU 2271	7	220	0,60	1,3	1,4
COSU 2272	14		1,20	2,3	3,7
COSU 2273	21		1,80	3,3	4,8
COSU 2274	28		2,40	5,2	7,0
COSO 2271	6	220	0,54	1,2	1,4
COSO 2272	12		1,09	2,1	3,7
COSO 2273	18		1,66	3,0	4,8
COSO 2274	24		2,18	4,7	7,0
COSU 3121	12	30	0,3	1,0	1,2
COSU 3122	24		0,6	1,3	1,5
COSU 3123	36		0,9	1,6	1,9
COSU 3124	48		1,2	1,9	2,3
COSU 3125	60		1,5	2,2	2,6

Used materials

TYPE	PUMP BODY	IMPELLER	DIFFUSER	STAR	SHAFT
COSU(O)158..-, 227..-	Al alloy	Bronze	Al alloy	Al alloy	1.0060
COSU(O)109..-, 312..-	Al alloy	Bronze	Al alloy	PPE 30GF	1.0060

Charasteristics of COSO pump

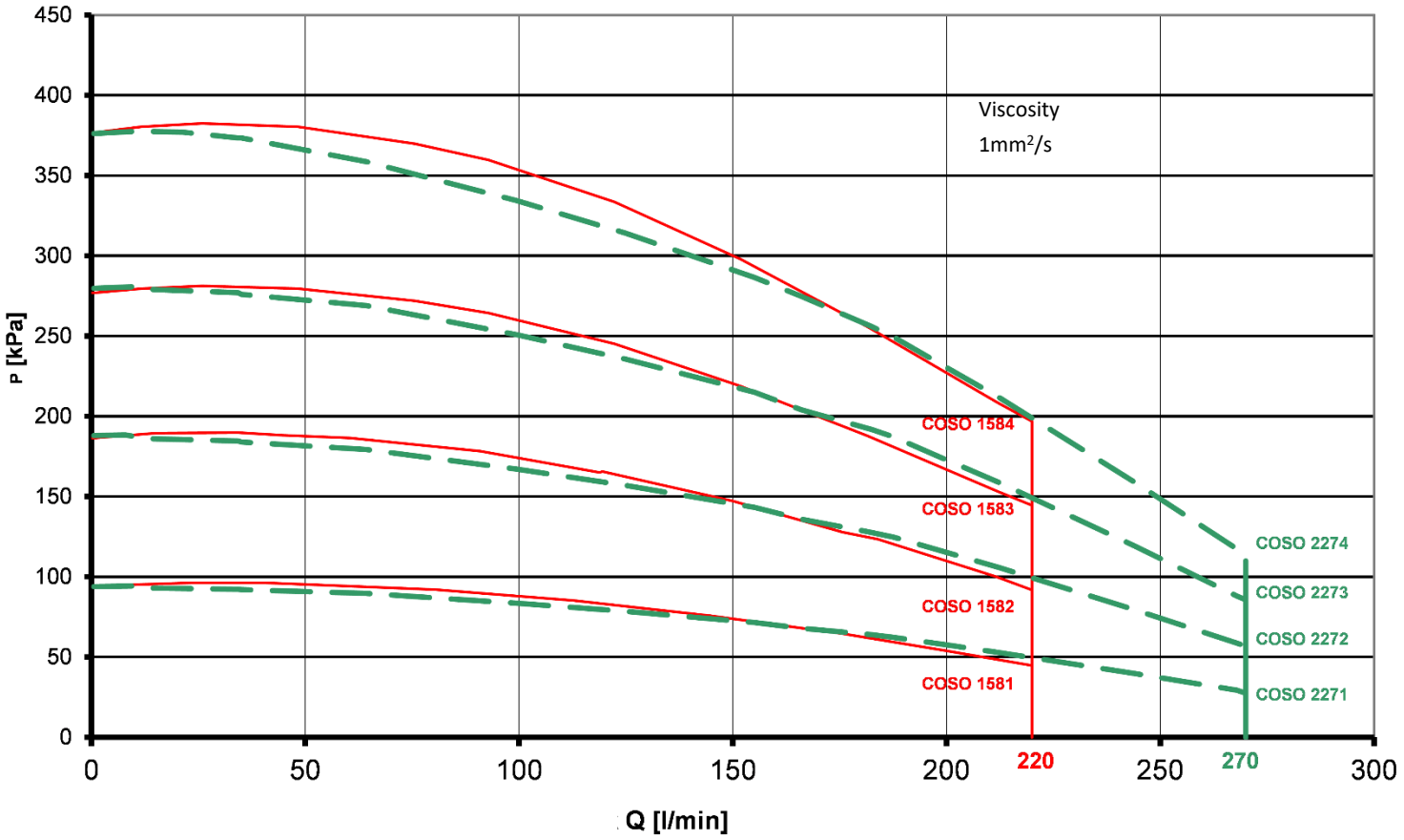

Charasteristics of COSU pump

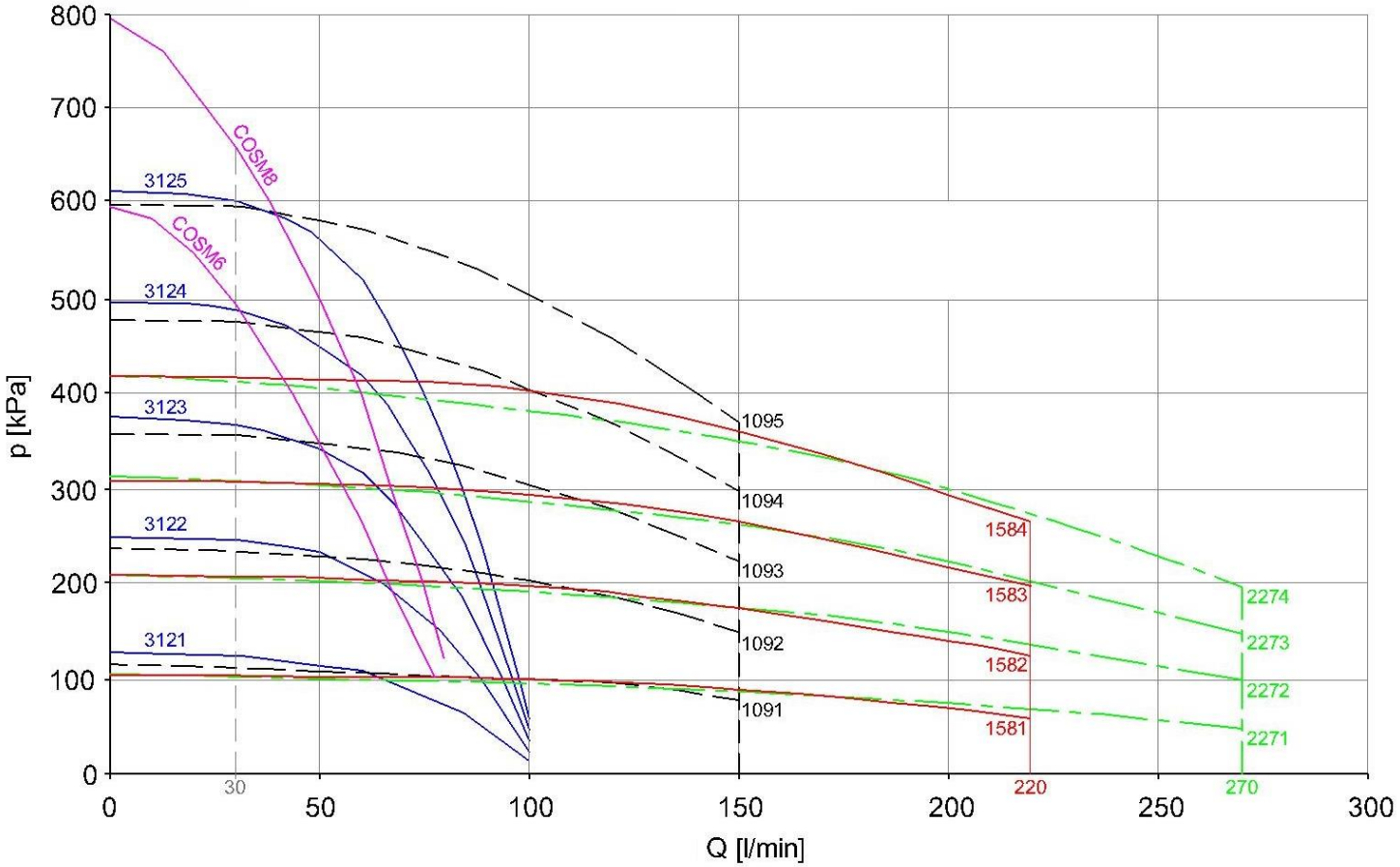

COS pump dimensions

TYPE	A[mm]	B[mm]	C[mm]	L[mm]
COS 1091-11	113	266	156	125
COS 1091-19	189			
COS 1091-26	259			
COS 1091-34	339			
COS 1092-16	154			
COS 1092-23	230			
COS 1092-30	300			
COS 1092-38	380			
COS 1093-20	194			
COS 1093-27	270			
COS 1093-34	340			
COS 1093-42	420			
COS 1094-24	235	283	176	128
COS 1094-32	320			
COS 1094-39	390			
COS 1094-47	470			
COS 1095-28	275	308		
COS 1095-36	360			
COS 1581-12	116	266	156	125
COS 1581-19	192			
COS 1581-26	262			
COS 1581-34	342			
COS 1582-16	159			
COS 1582-23	235			
COS 1582-30	305			
COS 1582-39	385			
COS 1583-20	202	283	176	128
COS 1583-29	287			
COS 1583-36	357			
COS 1584-24	245	308		
COS 1584-33	330			

TYPE	A[mm]	B[mm]	C[mm]	L[mm]
COS 2271-20	198	266	156	125
COS 2271-27	268			
COS 2271-35	348			
COS 2272-25	254	283	176	128
COS 2272-32	324			
COS 2272-40	404			
COS 2273-30	301	308		
COS 2273-37	371			
COS 2274-35	348	324		
COS 3121-11	113	266	156	125
COS 3121-19	189			
COS 3121-26	259			
COS 3121-34	339			
COS 3122-16	154			
COS 3122-23	230			
COS 3122-30	300			
COS 3122-38	380			
COS 3123-20	194			
COS 3123-27	270			
COS 3123-34	340			
COS 3123-42	420			
COS 3124-24	235			
COS 3124-32	311			
COS 3124-39	381			
COS 3125-28	275	283	176	128

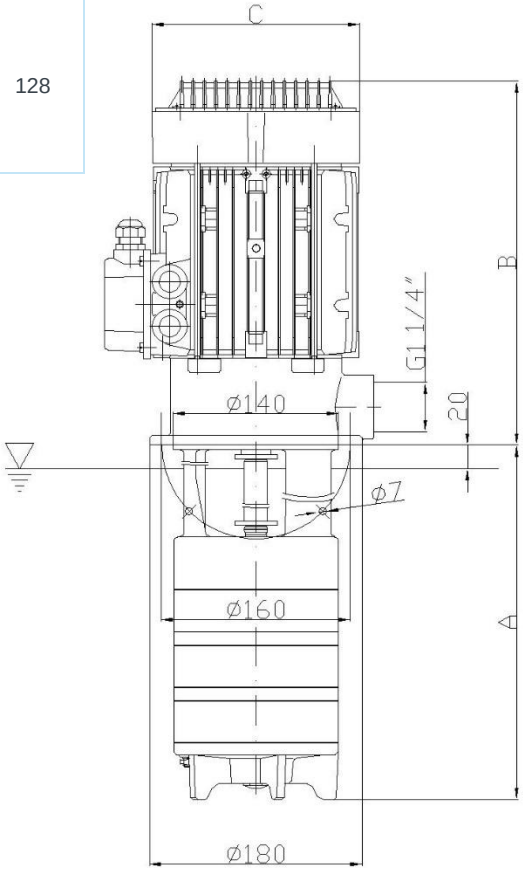

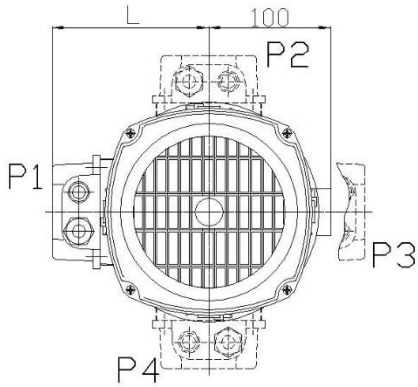

C=156

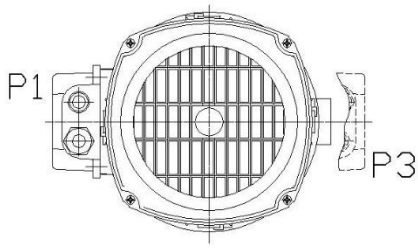

C=176

P1, P2, P3. P4 - position of the terminal block in relation to the output

MULTISTAGE PUMP COSM SERIES

The pumps are flanged suitable for fitting directly onto the tank with the pumped liquid. The pumps are designed for pumping of cooling liquids with viscosity of max 30mm/s and maximum temperature 80°C. The pumps are not suitable for pumping of flammable or combustible liquids or used in explosive environments. The value of acoustic pressure is max 72dB(A)

TYPE	HEAD [m]	PRESSURE [kPa]	FLOW [l/min]	POWER [kW]	CURRENT [A] at 400V	BREAKER SETTING [A] at 400V	DIMENSIONS			
							A	B	C	L
COSM6	48	480	30	1	1,8	3,5	206	353	176	128
COSM8	63	630	30	1,2	2,3	3,5	248	353	176	128
COSM10	80	800	30	1,9	2,9	3,5	291	353	176	128
COSM12	98	980	30	2,35	3,3	4	333	353	176	128
COSM15	123	1230	30	2,65	4,1	4,9	396	378	176	128
COSM17	140	1400	30	2,65	4,5	5,4	438	378	176	128
COSM20	164	1640	30	3,1	5,2	6,2	501	401	176	128
COSM22	185	1850	30	3,4	5,8	7	543	408	200	140
COSM25	215	2150	30	3,85	6,5	7,8	606	408	200	140

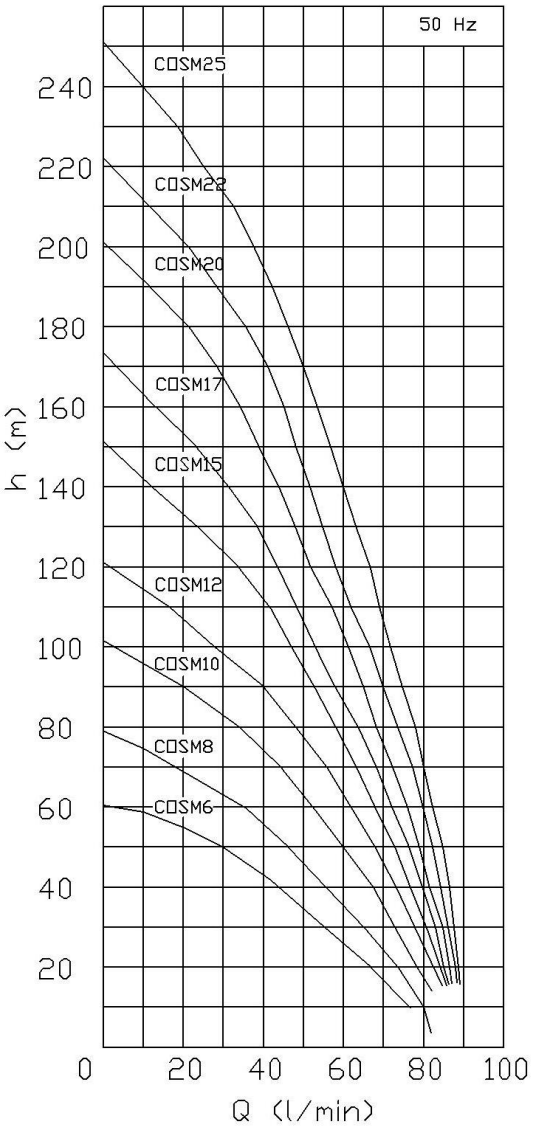

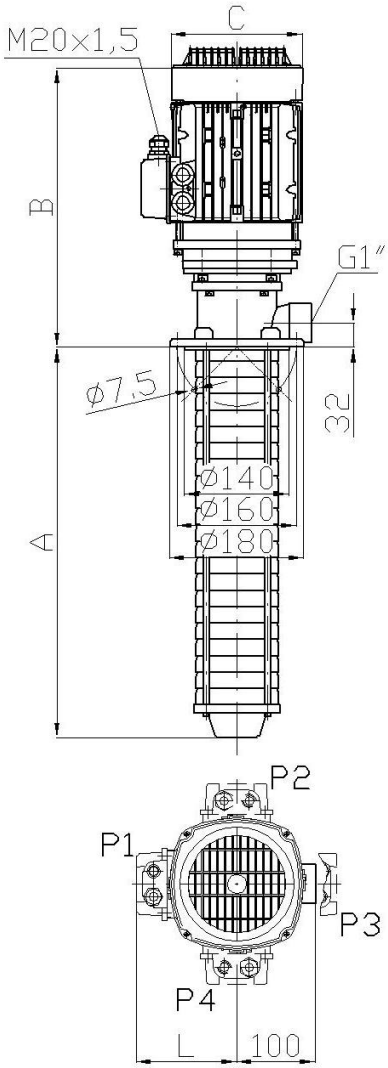

Used materials

PART	MATERIAL
Pump body	Cast-iron
Impeller	Stainless steel
Diffuser	Stainless steel
Shaft	Stainless steel
Mechanical seal	SiC

GEAR PUMPS CZ SERIES

The CZ Pump Series has been designed for pumping of cooling liquid for machine tools and especially for pressure lubrication of bearings. The viscosity of the pumped liquid can be max 115mm2s-1 and its temperature form 0°C to 60°C. The maximum size of impurities can be 0.1mm. The pumps are flanged suitable for fitting directly onto the tank with the pumped liquid. The position of the suction opening in the tank must such that no impure oil gets circulated. The bypass tube must be positioned in the tank so it does not cause excessive ripple.

TYPE	HEAD [m]	PRESSURE [kPa]	FLOW [l/min]	POWER [kW]	CURRENT [A] at 400V 50Hz	BREAKER SETTING [A] at 400V 50Hz
4CZA05; 4CZB05	30	300	0,9	0,09	0,26	0,31
4CZA2; 4CZB2	50	500	2,4	0,12	0,29	0,35
4CZA3; 4CZB3	120	1200	1,2	0,2	0,68	0,82

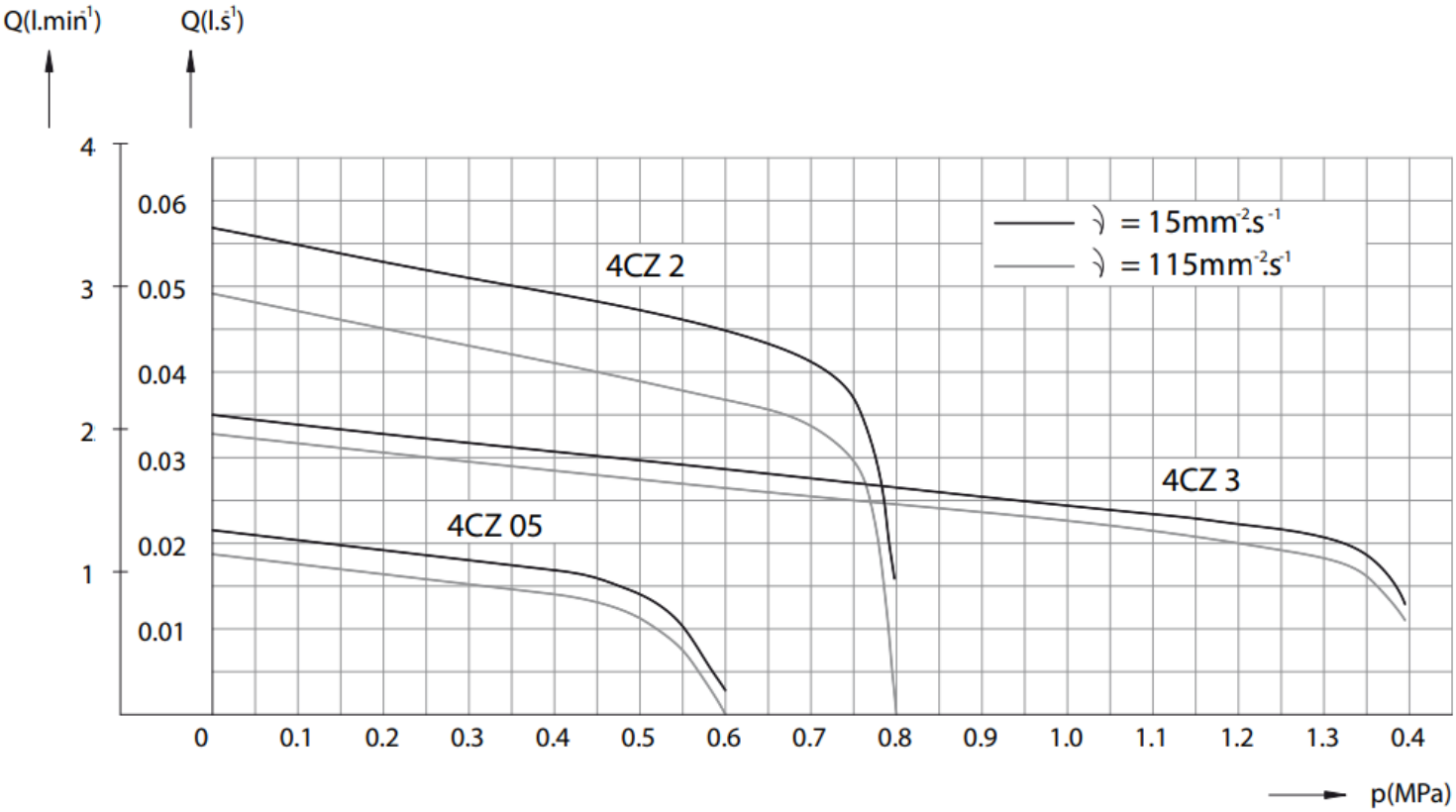

Used materials

PUMP BODY	CHAMBER BOTTOM	IMPELLER 1	IMPELLER 2	SHAFT
Cast-iron	Cast-iron	1.0715	Cast-iron	1.1219

Vertical design – 4CZA pumps

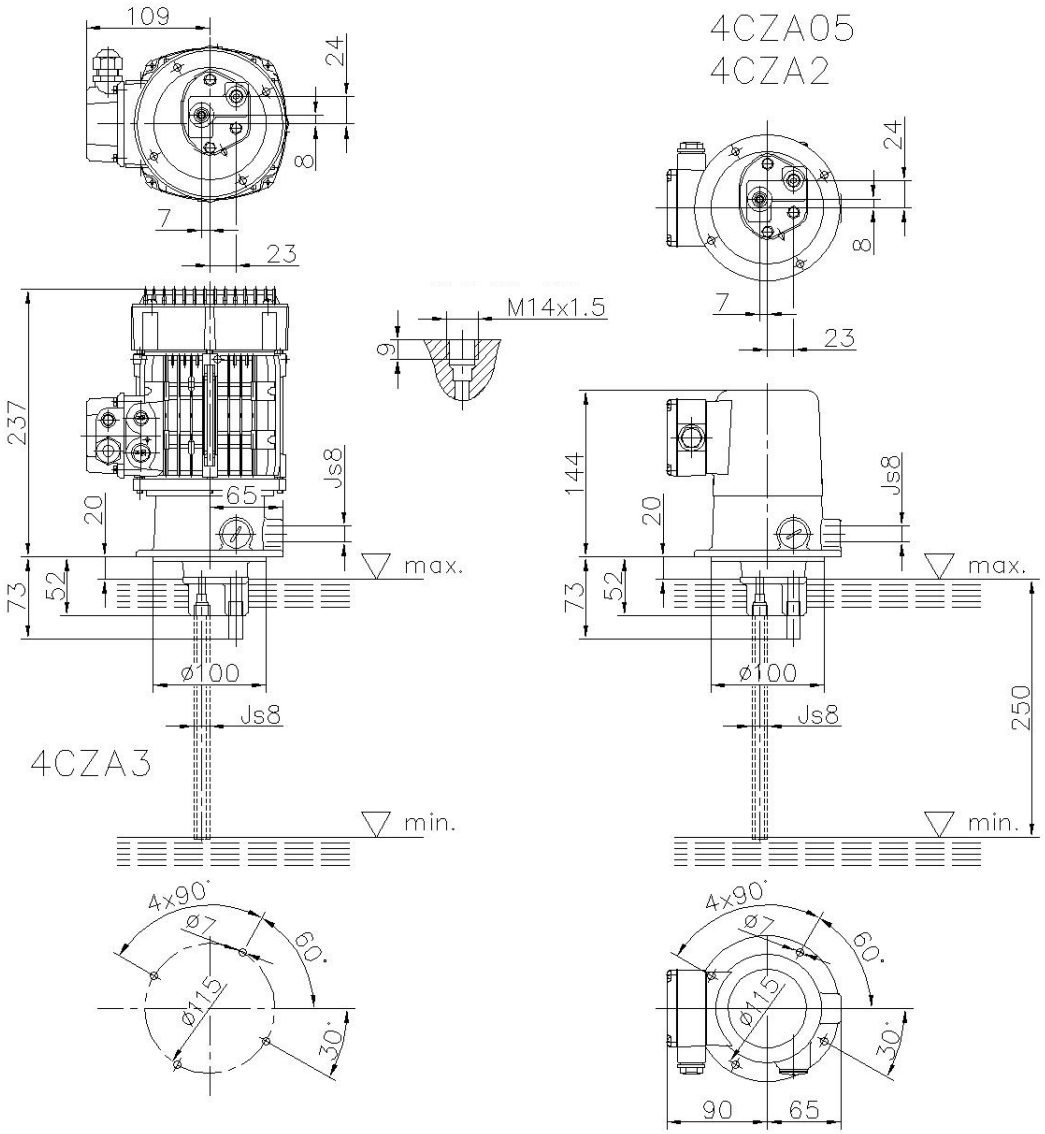

Horizontal design – 4CZB Pumps

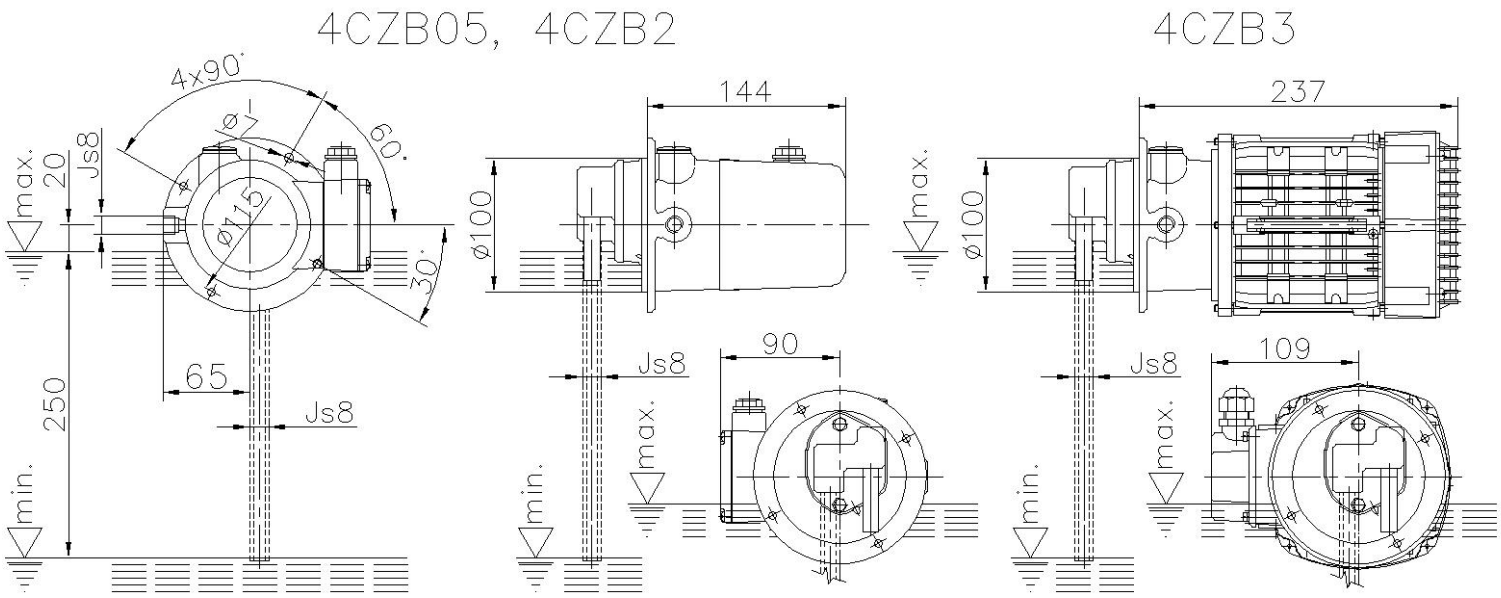

Electric Pumps

COA, COP, COV, COS, COSM, CZ

Contact:

+420 544 423 023

+420 544 423 020

+420 544 423 021

info@emp-slavkov.cz

www.emp-slavkov.cz

©EMP s.r.o.- elektromotory a čerpadla
Nádražní 394, 684 01 Slavkov u Brna