F1950RA.2.28

F1950RA.2.28

FASSI

www.fassi.com

FASSI CRANE F1950RA.2.28 - S (special version)

FASSI
www.fassi.com

MAXIMUM LOAD MOMENT : 116.8 TONS/M
MAXIMUM LOAD CAPACITY : 40 tons
MAXIMUM HORIZAONTAL HYDRAULIC OUTREACH : 21,5 m
360° CONTINUOUS ROTATION CRANE WITH ENDLESS ROTATING SYSTEM,
MAXIMUM WORKING PRESSURE: 365 bar

Equipped with:
RADIO REMOTE CONTROL SYSTEM,
FX900 ELECTRONIC OVERLOAD SECURITY SYSTEM - Optional:- WINCH V40 - L916 FLY JIB

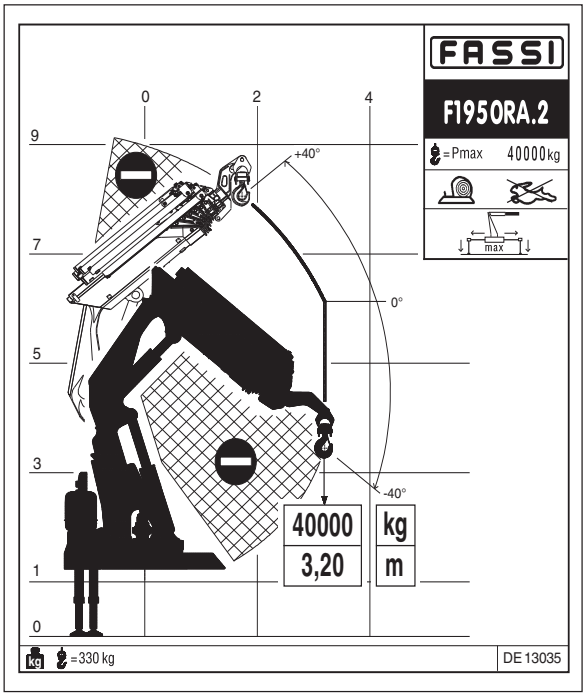

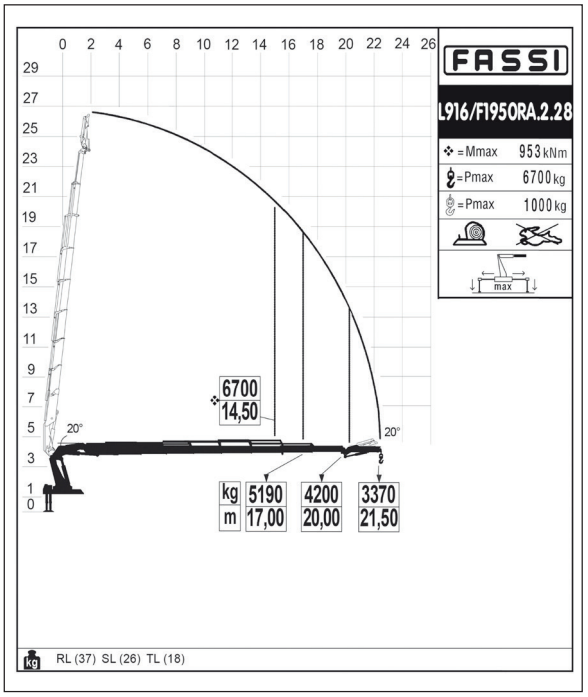

Technical data

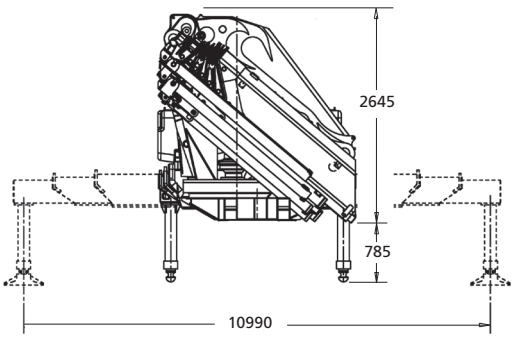

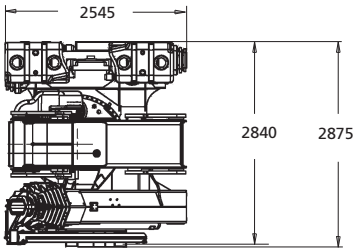

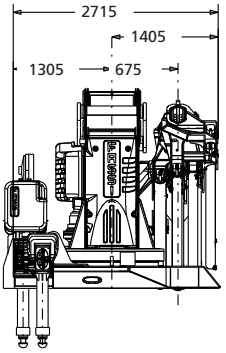

kg/m	tm	m	°	kNm	MPa	l/min	l	kg	mm	mm	mm
F1950RA.2.28	116,8	19,44	CONTINUOUS	130,0	36,5	100+100	250+250	14250	2545	2840	2645
F1950RA.2.28 L916	116,8	21,50	CONTINUOUS	130,0	36,5	100+100	250+250	16200	2550	2845	2895

STANDARD

- **IMC** Integral Machine Control — control
- **ADC** Automatic Dynamic Control — control
- **D900** Digital Multifunction Distributor Bank — control
- **RCH/RCS** Radio Remote Control — control
- **FX900** Fassi Electronic control — control
- **FSC** Fassi Stability Control — control
- ***CPM** Crane Position Monitoring — control
- **OTC** Oil Temperature Control — control
- **FS** Flow Sharing — performance
- **XF** Extra Fast — performance
- **MPES** Multy Power Estension System — performance
- **XP** Extra Power — performance
- **FL** Full Lift — performance
- **PROLINK** Progressive Link — performance
- **UHSS** Ultra High Strength Steel — strength
- **FWD** Fewer Welds Design — strength

OPTIONAL

- **ME** Manual Extension — control
- **FX901** Touch Screen Display — control
- **OHT** Outrigger Hydraulic Tilt — performance
- **JDP** Jib Dual Power — performance
- **FSA** Fassi Smart App — performance

* Compulsory for EU market - Obbligatorio per mercato europeo - Obligatoire pour les marchés de l'UE - Für den europäischen Markt erforderlich - Requerido para el mercado europeo - Vereist voor Europese markt